| PROJECT REFERENCE NO. | SHEET NO. |
|---|---|
| 14C.045165 | 2D-2 |
| R/W SHEET NO. | |
| ROADWAY DESIGN ENGINEER | HYDRAULICS ENGINEER |

# ROCK INLET SEDIMENT TRAP TYPE 'C' DETAIL

STATE OF
NORTH CAROLINA
DEPT. OF TRANSPORTATION
DIVISION OF HIGHWAYS
RALEIGH, N.C.

ENGLISH STANDARD DRAWING FOR

**ROCK INLET SEDIMENT TRAP TYPE 'C'**

SHEET 1 OF 1

**1632.03**

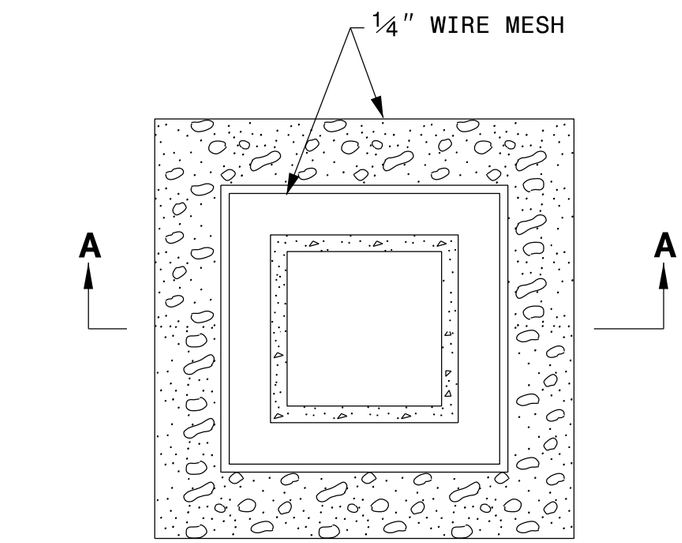


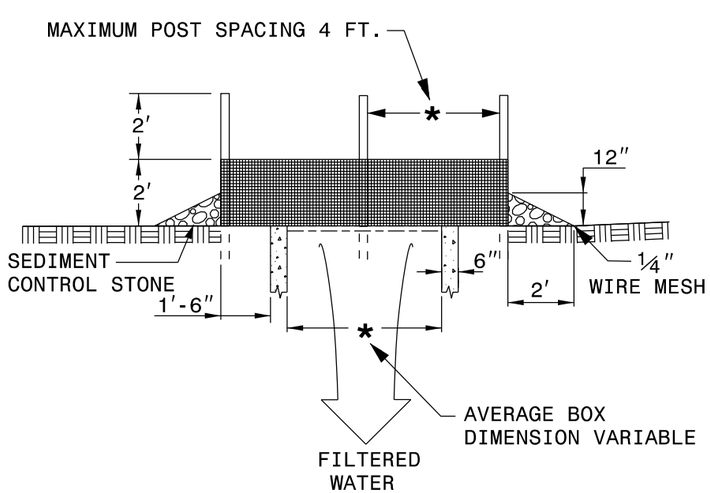


**SECTION A-A**

**MULTI-DIRECTIONAL FLOW**

NOTE
USE NO. 5 OR NO. 57 STONE FOR SEDIMENT CONTROL STONE.
USE 24 GAUGE MINIMUM WIRE MESH HARDWARE CLOTH WITH 1/4 INCH MESH OPENINGS.
PLACE TOP OF WIRE MESH A MINIMUM OF ONE FOOT BELOW THE SHOULDER OR ANY DIVERSION POINT.
INSTALL WIRE MESH UNDER SEDIMENT CONTROL STONE.
USE 5′ STEEL POST, INSTALLED 1.5′ DEEP MINIMUM, AND OF THE SELF-FASTENER ANGLE STEEL TYPE.
SPACE POST A MAXIMUM OF 4′.

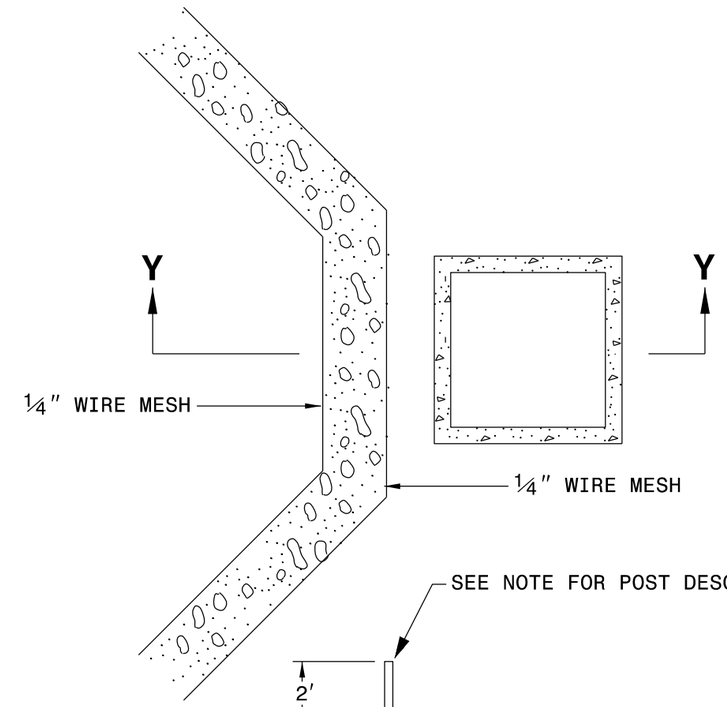


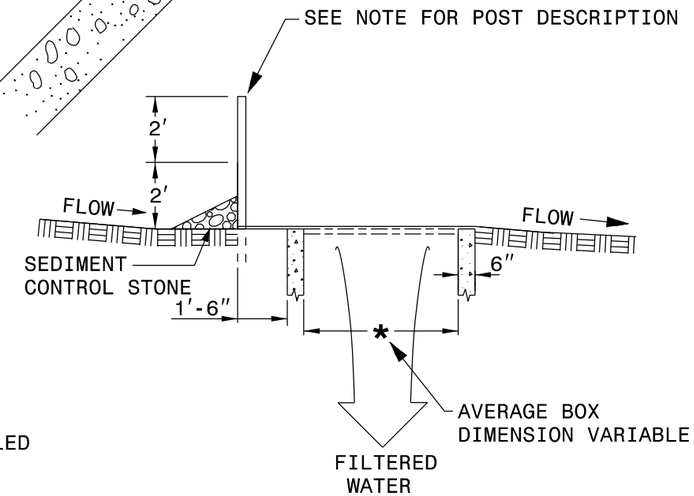


**SECTION Y-Y**

**SINGLE-DIRECTIONAL FLOW**

STATE OF
NORTH CAROLINA
DEPT. OF TRANSPORTATION
DIVISION OF HIGHWAYS
RALEIGH, N.C.

ENGLISH STANDARD DRAWING FOR

**ROCK INLET SEDIMENT TRAP TYPE 'C'**

SHEET 1 OF 1

**1632.03**